Table of contents

1 Introduction

2 Basic IC fabrication processes

3 Fabrication techniques for MEMS

4 Applications of MEMS

5 Mechanics issues of MEMS

MDL
NTHU

Chapter 1 Introduction

1.0 IC and MEMS

1.1 Terminology and general informations

1.2 Historical background

1.3 MEMS at Taiwan

MDL
NTHU

1.0 IC and MEMS

- **BJT (Bipolar Junction Transistor)**

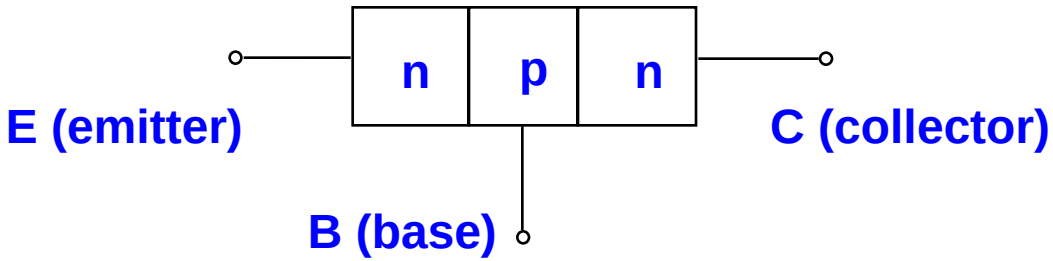

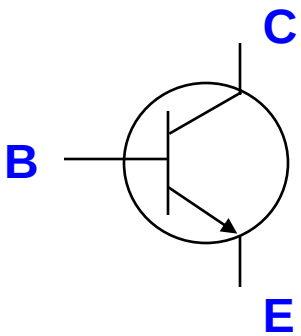

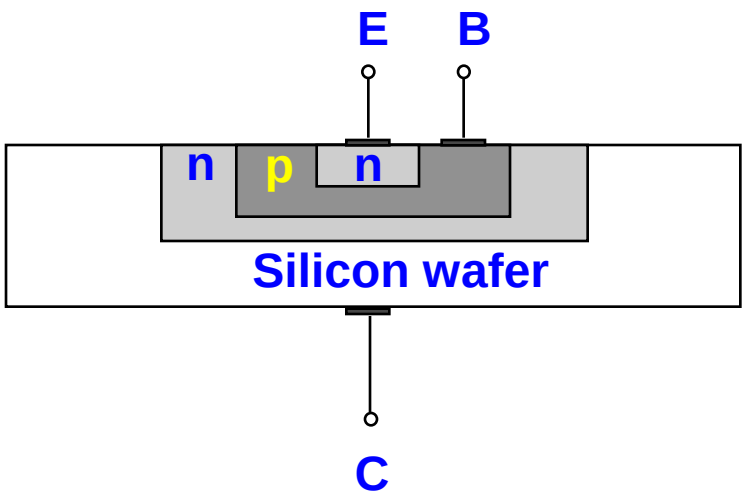

MDL
NTHU

- **A global view of an electronic component on a wafer**

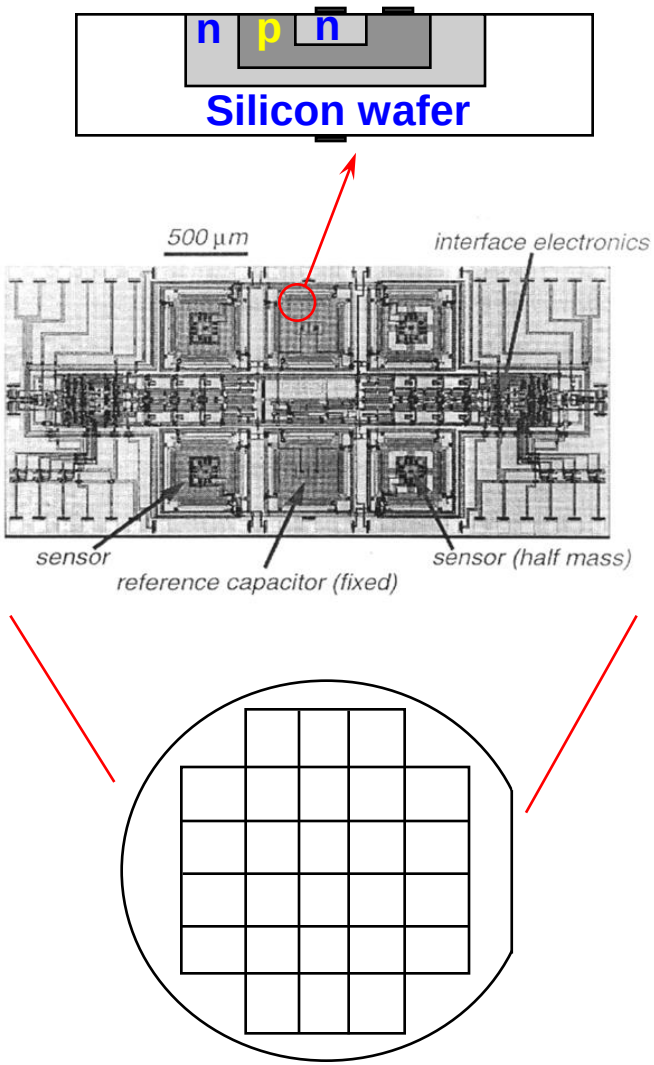

MDL
NTHU

- **MOS (Metal Oxide Semiconductor) Capacitor**

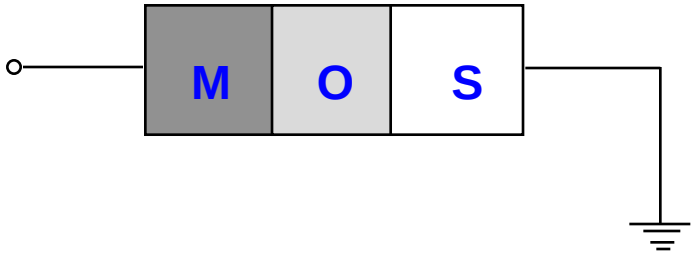

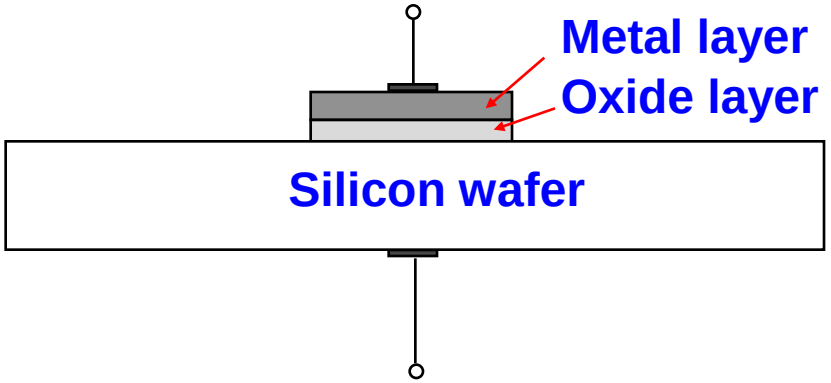

MDL
NTHU

- **MOS (Metal Oxide Semiconductor) Transistor**

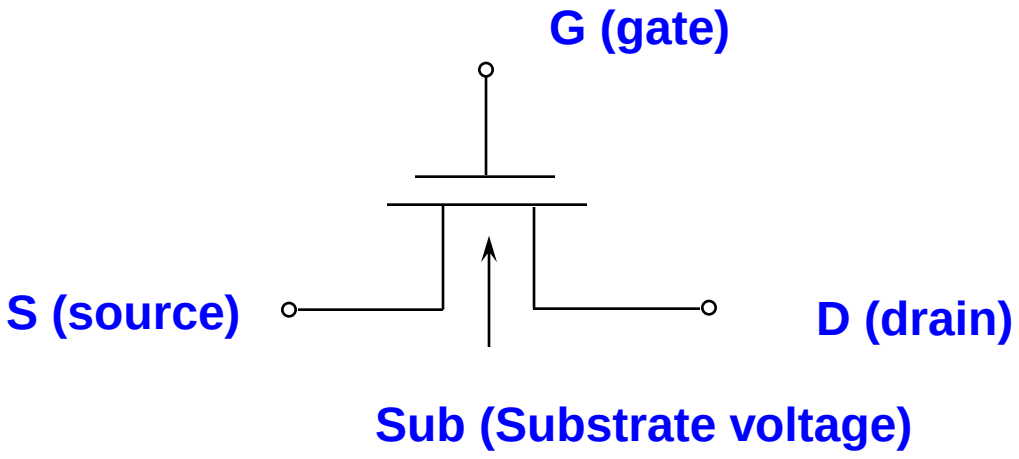

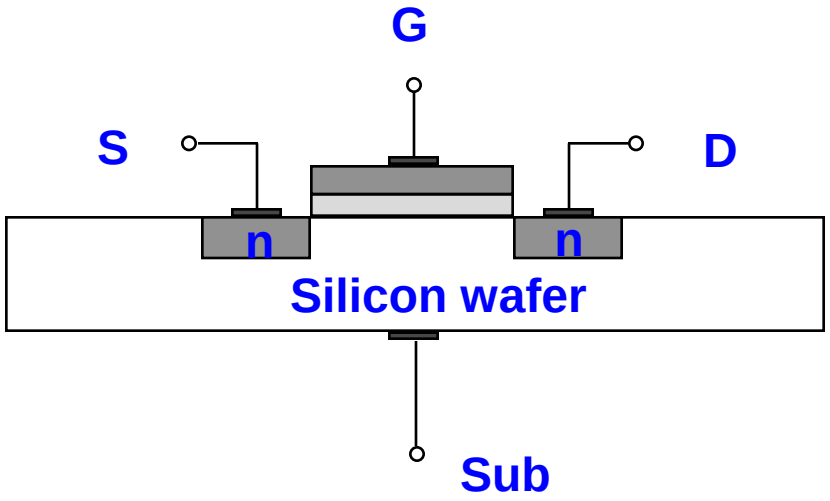

MDL
NTHU

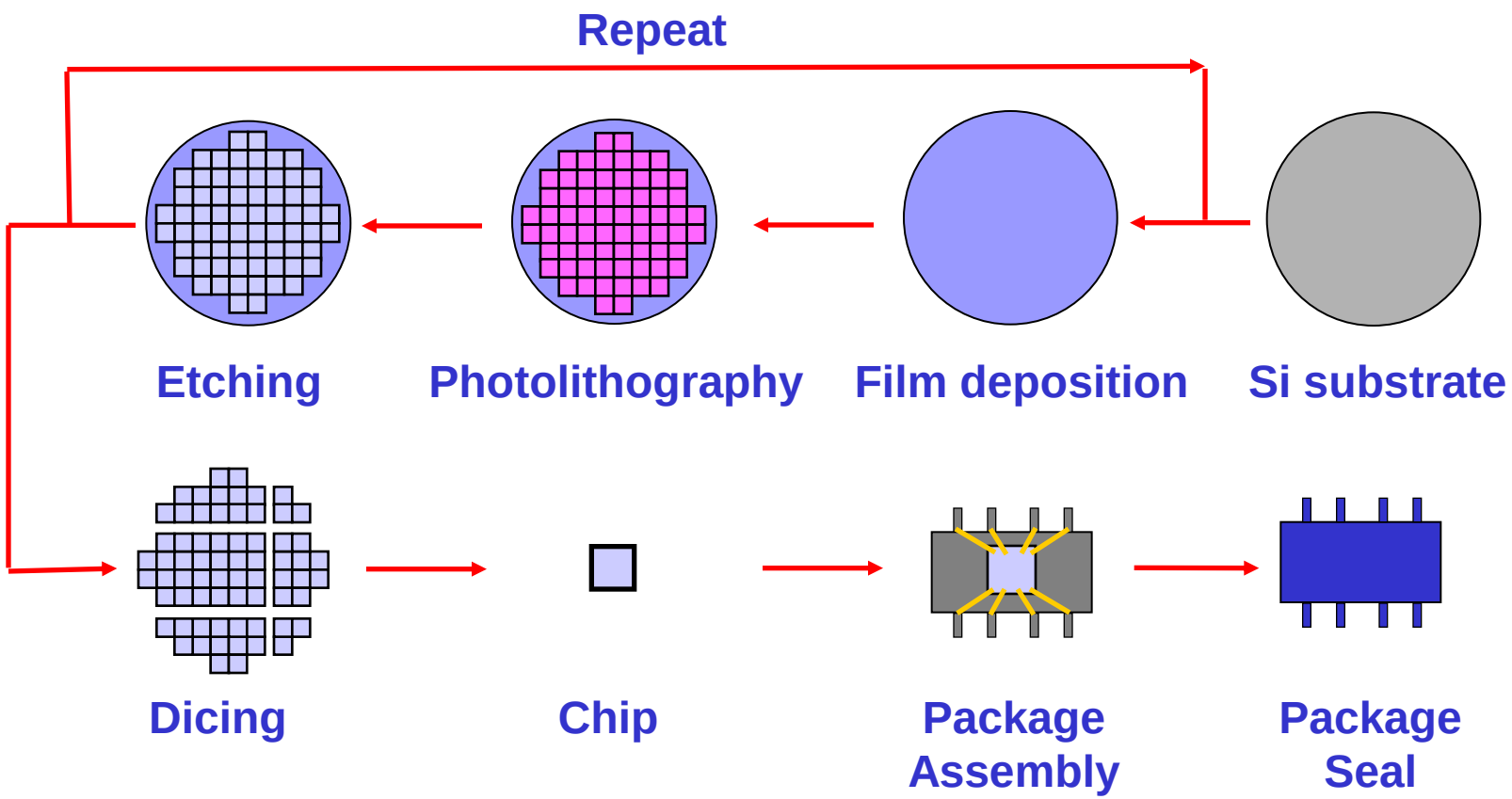
Repeat
Etching
Photolithography
Film deposition
Si substrate
Dicing
Chip
Package Assembly
Package Seal

MDL
NTHU

- **MEMS: Integration of electronic and mechanical components on the same chip**

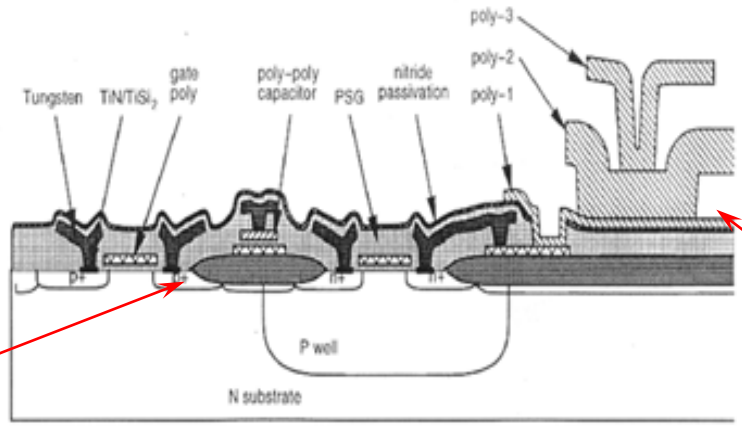

Electronic part

Mechanical part

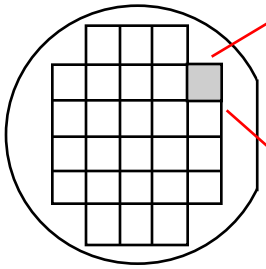

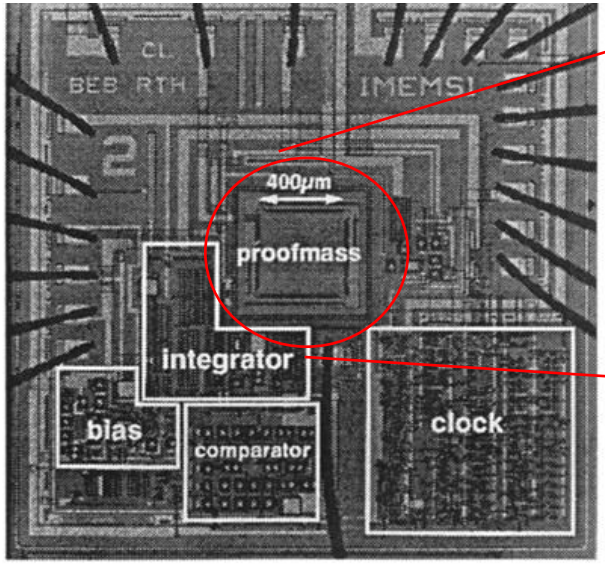

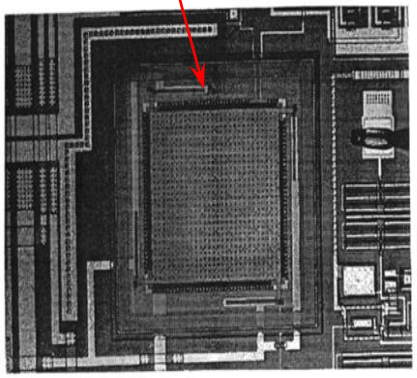

MDL
NTHU

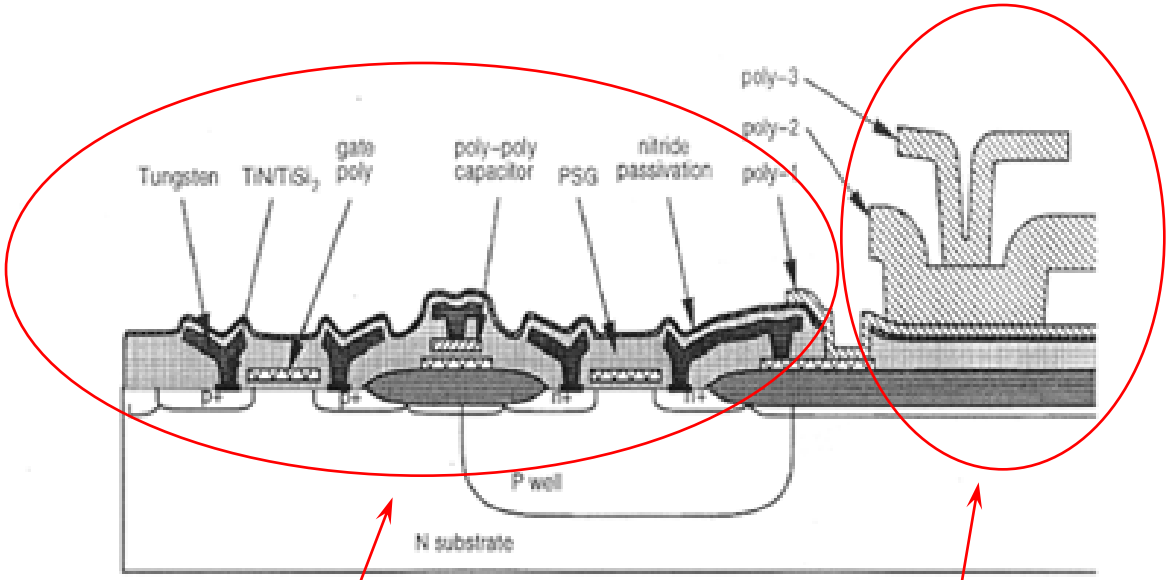

Electronics part

Mechanical part

MDL
NTHU

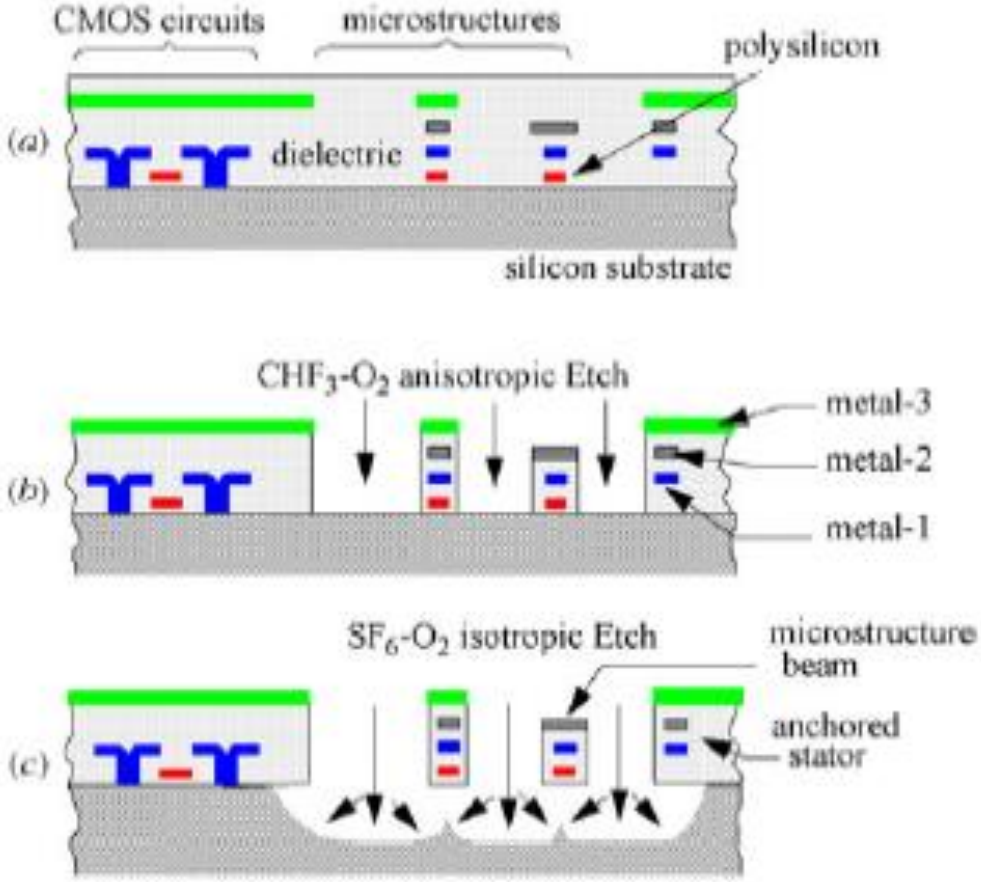

H. Lakdawala and G. K. Fedder, CMU, 2004

MDL NTHU